modaLIGHT® INSTALLATION

1 Must be installed by a qualified electrician in accordance with all national and local electrical and construction codes and regulations. Ensure system is de-energized before installation. Review electrical plans and read all installation instructions prior to installation. Failure to comply with the following installation instructions will void the warranty and may result in serious injury or possible death. With the constant development of our products please check our website (www.modalight.com) for the latest installation guide.

La instalación debe ser realizada por un electricista cualificado, de acuerdo con todos los códigos y normativas eléctricas y de construcción nacionales y locales. Asegúrese de que el sistema esté desconectado de la corriente antes de la instalación. Revise los planos eléctricos y lea todas las instrucciones de instalación antes de la instalación. El incumplimiento de las siguientes instrucciones de instalación anulará la garantía y podría provocar lesiones graves o incluso la muerte. Debido al constante desarrollo de nuestros productos, consulte nuestro sitio web (www.modalight.com) para obtener la guía de instalación más actualizada.

L'installation doit être effectuée par un électricien qualifié, conformément à tous les codes et réglementations électriques et de construction nationaux et locaux. Assurez-vous que le système est hors tension avant l'installation. Consultez les plans électriques et lisez toutes les instructions d'installation avant l'installation. Le non-respect des instructions d'installation suivantes annulera la garantie et peut entraîner des blessures graves, voire mortelles. Nos produits étant en constante évolution, veuillez consulter notre site web (www.modalight.com) pour obtenir le guide d'installation le plus récent.

2 Verify electrical plan and ensure all hardware is present

Verificar plan electrico y verifique que todo el equipo esté presente

Vérifier le plan électrique et assurer que tout le matériel est présent

DRY/DAMP LOCATION INSTALL
INSTALACIÓN DE LUGARES SECOS/HÚMEDOS
INSTALLATION EMPLACEMENT SEC/HUMIDE

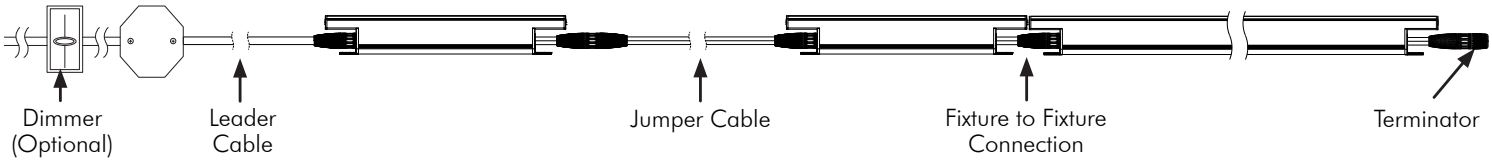

MAX CONTINUOUS RUN

Product	120V AC	Mix of Fixtures (120V AC)	277V AC	Mix of Fixtures (277V AC)
Moda Interior 0-10V 1ft Low Output	50ft	50	75ft	75
Moda Interior 0-10V 4ft Low Output	300ft		300ft	
Moda Interior 0-10V 1ft Low Output Plus	45ft	35	65ft	65
Moda Interior 0-10V 4ft Low Output Plus	140ft		260ft	
Moda Interior 0-10V 1ft Low Output Plus Plus	40ft	25	55ft	55
Moda Interior 0-10V 4ft Low Output Plus Plus	100ft		220ft	
Moda Interior 0-10V 1ft Standard Output	35ft	15	45ft	40
Moda Interior 0-10V 4ft Standard Output	60ft		160ft	
Moda Interior 0-10V 1ft Standard Output Plus	30ft	12	35ft	35
Moda Interior 0-10V 4ft Standard Output Plus	48ft		140ft	
Moda Interior 0-10V 1ft Standard Output Plus Plus	25ft	10	35ft	25
Moda Interior 0-10V 4ft Standard Output Plus Plus	40ft		100ft	

NOTE: Only use a sink control system. Each electrical connection from fixture to fixture draws 1mA of power. Check for mA restrictions on your chosen 0-10V control system. A 50mA limit will restrict your run to 50 x 1ft fixtures.

POWER CONSUMPTION

Product	1ft @ 120V	1ft @ 277V	4ft @ 120V	4ft @ 277V
Moda Interior 0-10V Low Output	2.0W	2.5W	7.4W	9.5W
Moda Interior 0-10V Low Output Plus	4.0W	4.6W	14.8W	17.5W
Moda Interior 0-10V Low Output Plus Plus	6.0W	6.5W	22.2W	24.7W
Moda Interior 0-10V Standard Output	8.0W	8.4W	29.6W	31.9W
Moda Interior 0-10V Standard Output Plus	9.2W	9.7W	34.0W	36.9W
Moda Interior 0-10V 1ft Standard Output Plus Plus	11.2W	11.6W	41.4W	44.1W

Due to continuous improvements and innovations, specifications may change without notice. Please refer to our website for current technical data. These figures are provided as a guideline only and may vary with differing power supplies and installations. All rights reserved. E&OE.

3280 W Sunset Rd Las Vegas, NV 89118 | T: 702 407 7775
F: 702 407 7773 | www.modalight.com | © 2026

3 Fixture Mounting

Artículos fijos Montaje

Fixation Montage

Ensure the mounting surface is level before installing each Moda Interior fixture. Suitable substrates include steel, aluminum, concrete, or wood.

Each Moda Interior fixture is supplied with two integrated swivel mounts for attachment to suitable surfaces. The fixture can be adjusted from vertical to horizontal, with a tilt range of approximately 90° from vertical.

Use hardware, bolts, or screws (supplied by others) that are properly sized for the mounting bracket bases and appropriate for the installation surface.

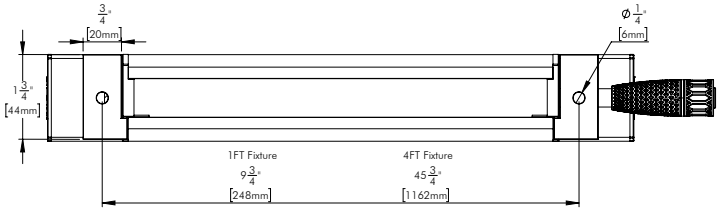

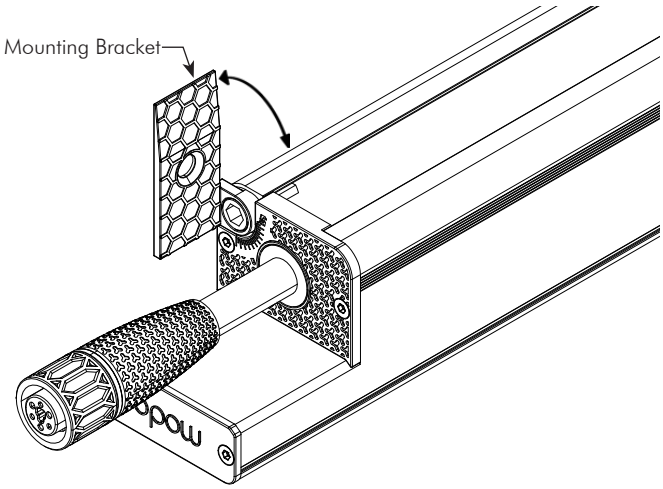

4 Mount to surface using the 2 screw holes on the bracket

Monte a superficie utilizando los 2 agujeros para tornillos en el soporte

Mont à la surface en utilisant les 2 trous de vis sur le support

Accepts screw sizes

Structural Screws	#8	#10	#12
Self tapping	#8	#10	#12
Concrete Anchor		3/16"	

(By others)

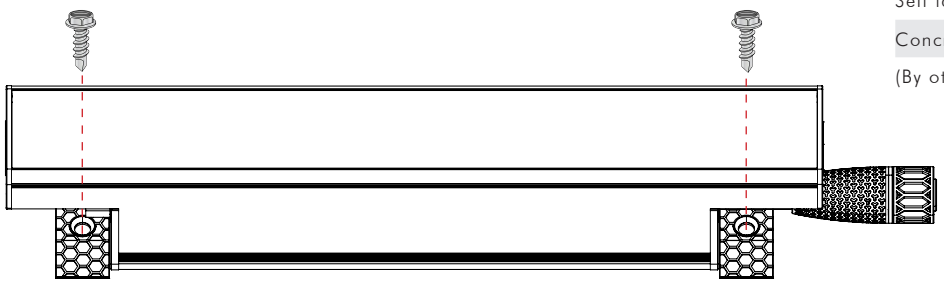

5 Fixture Tilt Adjustment

Ajuste de la inclinación del accesorio

Réglage de l'inclinaison du luminaire

To adjust the tilt, loosen the bracket tilt bolts located at each end of the fixture using a 4mm Allen wrench. Tilt gauges on both sides of each mount provide accurate angle reference. Once the desired tilt angle is set, tighten the bolts securely to lock the position.

Tilt Gauge: Each mark indicates a 5° increment.

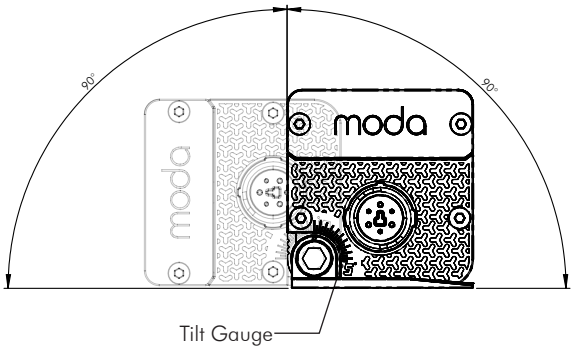

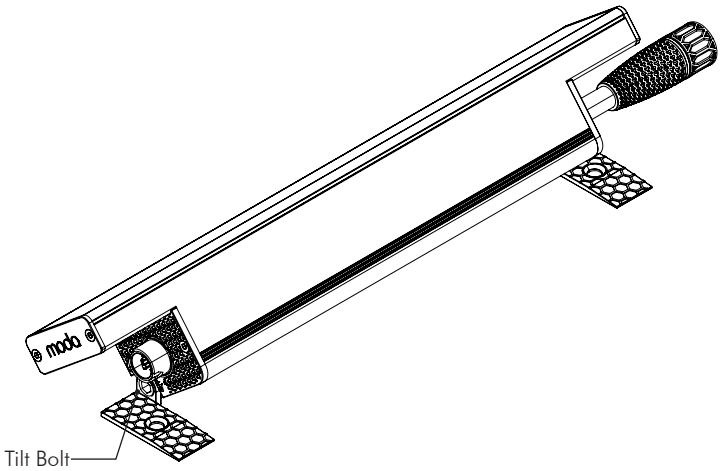

Due to continuous improvements and innovations, specifications may change without notice. Please refer to our website for current technical data. These figures are provided as a guideline only and may vary with differing power supplies and installations. All rights reserved. E&OE.

3280 W Sunset Rd Las Vegas, NV 89118 | T: 702 407 7775
F: 702 407 7773 | www.modalight.com | © 2026

6 Ground Mounting Arm

Ordering SKU: MPGMA-I-XXFT-SV

Brazo de montaje en tierra

Bras de fixation au sol

The installer must ensure the surface is sound, level, and free of cracks or damage. Suitable substrates include steel, aluminum, concrete, or wood. Use properly sized hardware (by others) for the mounting bracket and surface.

The fixture can be adjusted up to 240° for precise positioning.

Remove the existing brackets located on either end of the fixture as these are no longer required.

Use hardware, bolts, or screws (supplied by others) that are properly sized for the mounting bracket bases and appropriate for the installation surface.

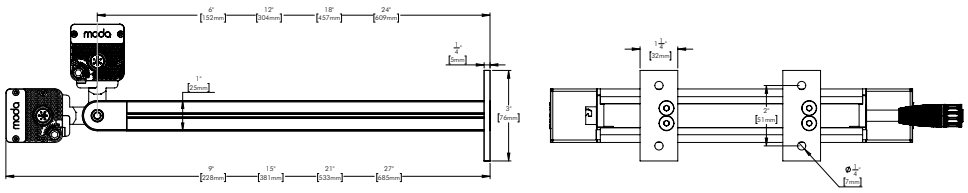

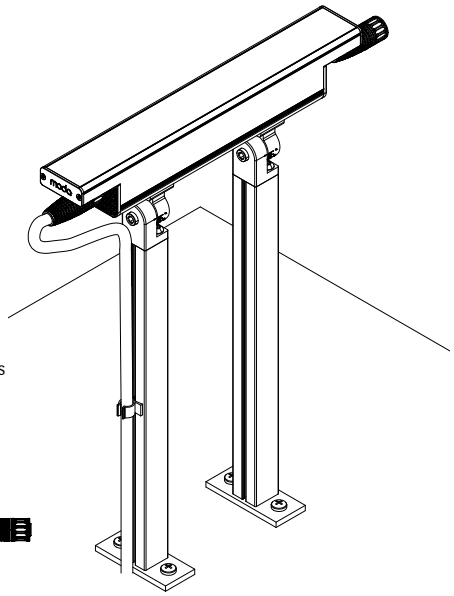

7 Mounting Hardware

Herrajes de montaje

Matériel de montage

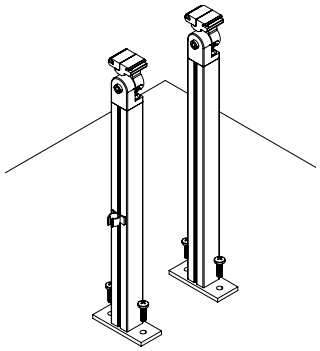

Mounting Hardware

Structural Screws	#10	#12	#14
Self tapping	#10	#12	#14
Concrete Anchor	3/16", 1/4"		
Machine Screws	1/4"-20 bolt, M6 nuts, bolts & washers		
Wedge Anchor	1/4"		
Sleeve Anchor	1/4"		
Drop-In Anchor	1/4"		

(By others)

8 Attaching the Fixture to the Ground Mounting Arm

Fijación del accesorio al brazo de montaje en el suelo

Fixation du dispositif au bras de montage au sol

The Moda Interior Ground Arm includes two set screws. One side of the mounting bracket can be detached from the arm by loosening the set screw. Once disconnected, the bracket can be attached to the underside of the fixture. After installation, slide the mounting bracket back into the arm. Position the arm in the desired location on the fixture, then tighten the set screws to secure the arm in place.

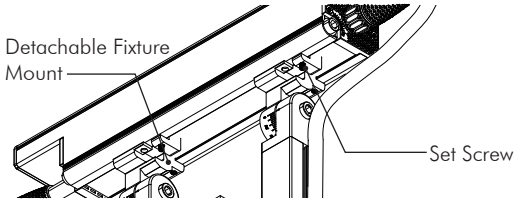

9 Ground Mounting Arm Tilt Adjustment

Ajuste de la inclinación del brazo de montaje en el suelo

Réglage de l'inclinaison du bras de fixation au sol

To adjust the tilt, loosen the bracket tilt bolts located on the side of the bracket using an M5 (5mm) Allen wrench. Tilt gauges on the side of each mount provide accurate angle reference. Once the desired tilt angle is set, tighten the bolt securely to lock the position.

Tilt Gauge: Each mark indicates a 5° increment.

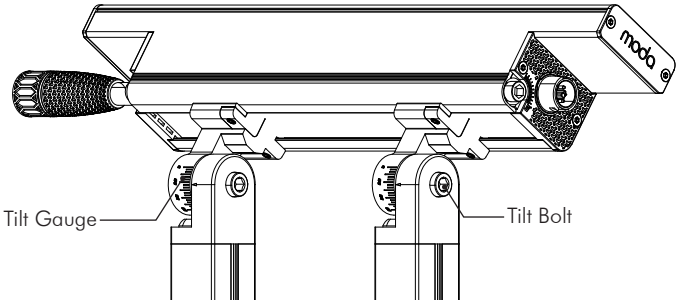

10 Cable Clamp

Abrazadera para cables

Serre-câble

The Moda Interior Ground Mounting Arm includes cable clamps that attach to the extruded channel on either side of the arm. The number of cable clamps provided will vary depending on the length of the arm.

	Mounting Arm Length			
	6in	12in	18in	24in
Cable Clamp Quantity	1	2	3	4

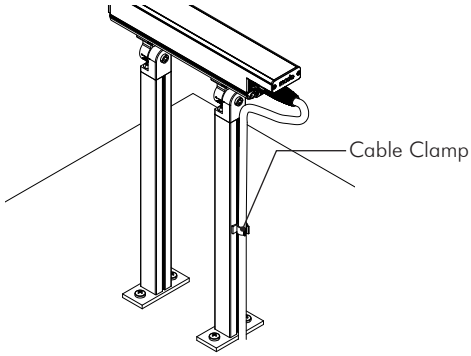

Due to continuous improvements and innovations, specifications may change without notice. Please refer to our website for current technical data. These figures are provided as a guideline only and may vary with differing power supplies and installations. All rights reserved. E&OE.

3280 W Sunset Rd Las Vegas, NV 89118 | T: 702 407 7775
F: 702 407 7773 | www.modalight.com | © 2026

11 Pendant Mounting Arm

Ordering SKU: MPGMA-I-XXFT-SV

Brazo de montaje colgante

Bras de fixation pour luminaire suspendu

The installer must ensure the surface is sound, level, and free of cracks or damage. Suitable substrates include steel, aluminum, concrete, or wood. Use properly sized hardware (by others) for the mounting bracket and surface.

The fixture can be adjusted up to 240° for precise positioning.

Remove the existing brackets located on either end of the fixture as these are no longer required.

Use hardware, bolts, or screws (supplied by others) that are properly sized for the mounting bracket bases and appropriate for the installation surface.

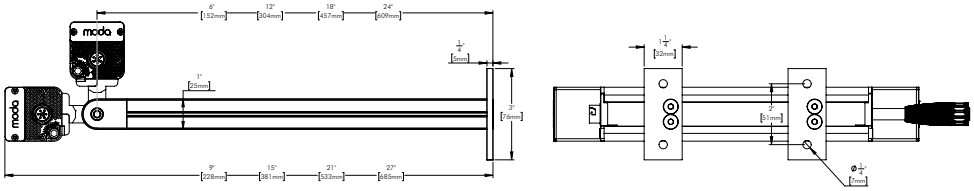

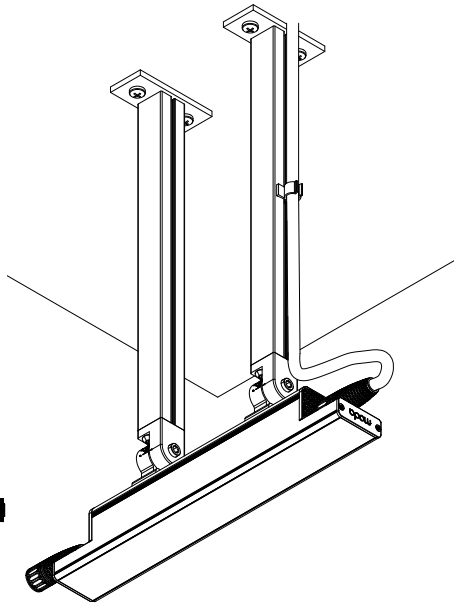

12 Mounting Hardware

Herrajes de montaje

Matériel de montage

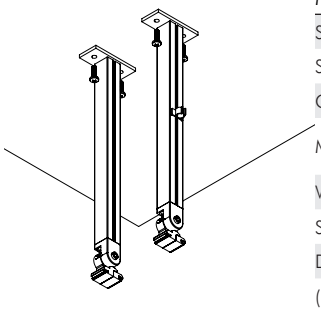

Mounting Hardware

Structural Screws	#10	#12	#14
Self tapping	#10	#12	#14
Concrete Anchor	3/16", 1/4"		
Machine Screws	1/4"-20 bolt, M6 nuts, bolts & washers		
Wedge Anchor	1/4"		
Sleeve Anchor	1/4"		
Drop-In Anchor	1/4"		

(By others)

13 Attaching the Fixture to the Pendant Mounting Arm

Fijación de la luminaria al brazo de montaje colgante

Fixation du luminaire au bras de montage suspendu

The Moda Interior Pendant Arm includes two set screws. One side of the mounting bracket can be detached from the arm by loosening the set screw. Once disconnected, the bracket can be attached to the underside of the fixture. After installation, slide the mounting bracket back into the arm. Position the arm in the desired location on the fixture, then tighten the set screws to secure the arm in place.

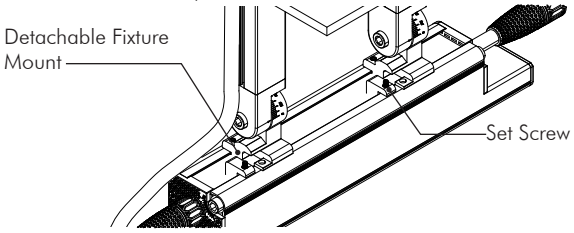

14 Pendant Mounting Arm Tilt Adjustment

Ajuste de inclinación del brazo de montaje colgante

Réglage de l'inclinaison du bras de montage suspendu

To adjust the tilt, loosen the bracket tilt bolts located on the side of the bracket using an M5 (5mm) Allen wrench. Tilt gauges on the side of each mount provide accurate angle reference. Once the desired tilt angle is set, tighten the bolt securely to lock the position.

Tilt Gauge: Each mark indicates a 5° increment.

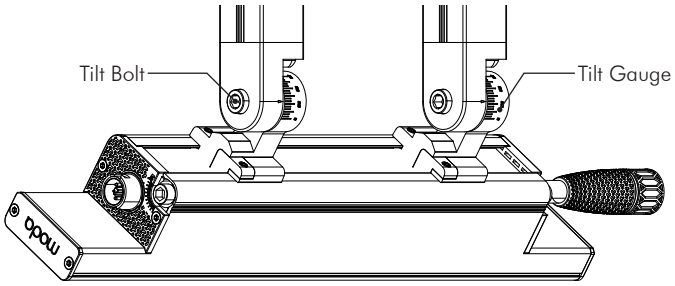

15 Cable Clamp

Abrazadera para cables

Serre-câble

The Moda Interior Pendant Mounting Arm includes cable clamps that attach to the extruded channel on either side of the arm. The number of cable clamps provided will vary depending on the length of the arm.

	Mounting Arm Length			
	6in	12in	18in	24in
Cable Clamp Quantity	1	2	3	4

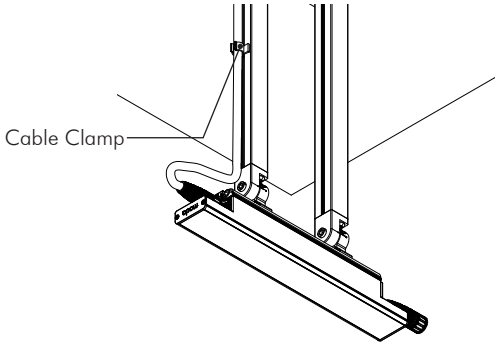

Due to continuous improvements and innovations, specifications may change without notice. Please refer to our website for current technical data. These figures are provided as a guideline only and may vary with differing power supplies and installations. All rights reserved. E&OE.

3280 W Sunset Rd Las Vegas, NV 89118 | T: 702 407 7775
F: 702 407 7773 | www.modalight.com | © 2026

16 Wall Mounting Arm

Ordering SKU: MWMA-I-XXFT-SV

Brazo de montaje en pared

Bras de fixation murale

The installer must ensure the surface is sound, level, and free of cracks or damage. Suitable substrates include steel, aluminum, concrete, or wood. Use properly sized hardware (by others) for the mounting bracket and surface.

The fixture can be adjusted up to 180° for precise positioning.

Remove the existing brackets located on either end of the fixture as these are no longer required.

Use hardware, bolts, or screws (supplied by others) that are properly sized for the mounting bracket bases and appropriate for the installation surface.

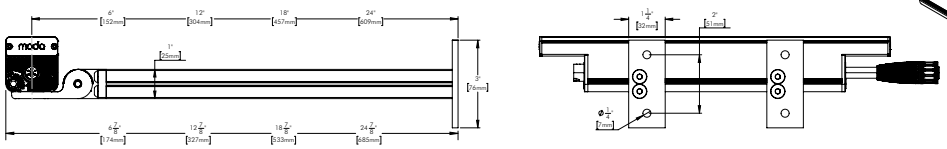

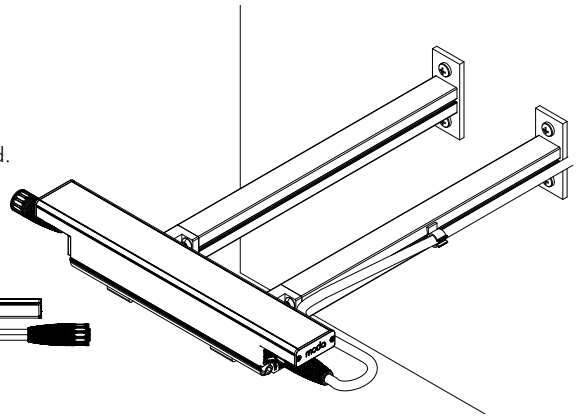

17 Mounting Hardware

Herrajes de montaje

Matériel de montage

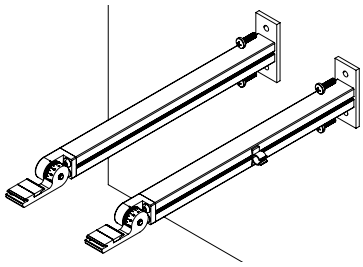

Mounting Hardware

Structural Screws	#10 #12 #14
Self tapping	#10 #12 #14
Concrete Anchor	3/16", 1/4"
Machine Screws	1/4"-20 bolt, M6 nuts, bolts & washers
Wedge Anchor	1/4"
Sleeve Anchor	1/4"
Drop-In Anchor	1/4"

(By others)

18 Attaching the Fixture to the Wall Mounting Arm

Cómo fijar el accesorio al brazo de montaje en pared

Fixation du dispositif au bras de fixation murale

The Moda Interior Wall Arm includes two set screws. One side of the mounting bracket can be detached from the arm by loosening the set screw. Once disconnected, the bracket can be attached to the underside of the fixture. After installation, slide the mounting bracket back into the arm. Position the arm in the desired location on the fixture, then tighten the set screws to secure the arm in place.

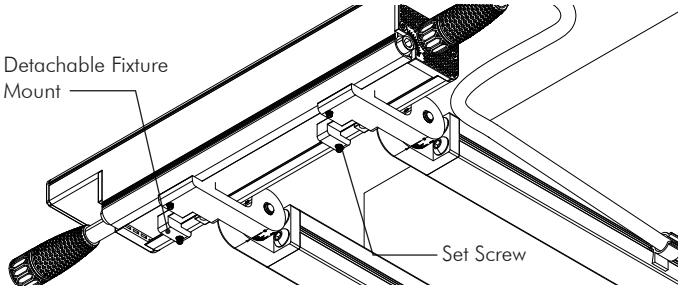

19 Ground Mounting Arm Tilt Adjustment

Ajuste de la inclinación del brazo de montaje en el suelo

Réglage de l'inclinaison du bras de fixation au sol

To adjust the tilt, loosen the bracket tilt bolts located on the side of the bracket using an M5 (5mm) Allen wrench. Tilt gauges on the side of each mount provide accurate angle reference. Once the desired tilt angle is set, tighten the bolt securely to lock the position.

Tilt Gauge: Each mark indicates a 5° increment.

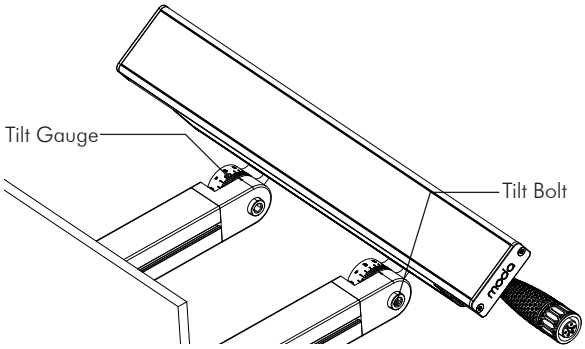

20 Cable Clamp

Abrazadera para cables

Serre-câble

The Moda Interior Wall Mounting Arm includes cable clamps that attach to the extruded channel on either side of the arm. The number of cable clamps provided will vary depending on the length of the arm.

	Mounting Arm Length			
	6in	12in	18in	24in
Cable Clamp Quantity	1	2	3	4

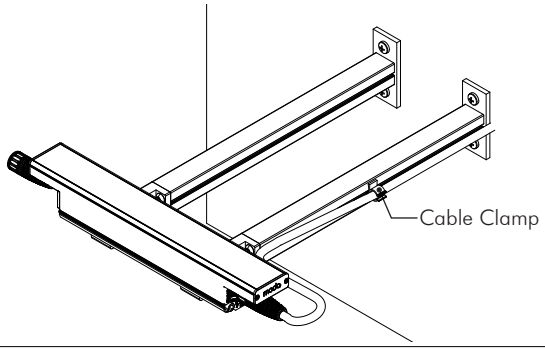

Due to continuous improvements and innovations, specifications may change without notice. Please refer to our website for current technical data. These figures are provided as a guideline only and may vary with differing power supplies and installations. All rights reserved. E&OE.

3280 W Sunset Rd Las Vegas, NV 89118 | T: 702 407 7775
F: 702 407 7773 | www.modalight.com | © 2026

21 Leader Cable Wiring

Cableado de cables líderes

Câblage de câble leader

Moda Interior fixtures utilize proprietary 6-way connectors for both power and 0–10V control. Connector placement at each end of the fixture allows direct end-to-end connection without the need for additional link cables.

Leader cables, available separately in 10ft, 25ft and 50ft lengths, provide both power and control connections. The wiring configuration is as follows:

	UL/cUL	Pinout
Live 100-277V	Black	4
Neutral	White	6
Ground	Green	2
0-10V (+)	Purple	3
0-10V (–)	Pink	5
Not Used	Grey	1

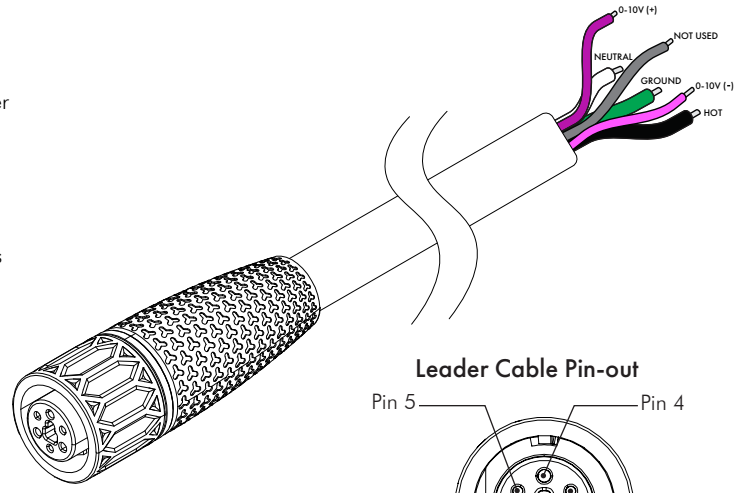

Note: Unused conductors must be capped with UL-listed wire nuts to prevent accidental contact.

Leader Cable Pin-out

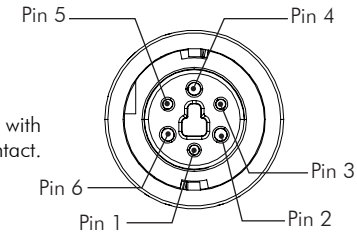

22 Fixture to Fixture Connection

Conexión de accesorio a accesorio

Connexion d'appareil à appareil

Each Moda Interior fixture is equipped with a male input plug on one end and a female output socket on the other. For end-to-end installations, the input plug of one fixture connects directly to the output socket of the preceding fixture.

If spacing is required between fixtures, optional jumper cables are available to bridge the gap.

Step 1: Align the male and female connector.
Paso 1: Alinear el connector macho con hembra.
Étape 1: Alignez le connecteur mâle et femelle.

Step 2:Push connection together (listen for the "click" that confirms a full connection)
Paso 1: Empuje la conexión para unirla (escuche el "clic" que confirma una conexión completa)
Étape 1:Appuyez sur la connexion ensemble (écoutez le « clic » qui confirme une connexion complète)

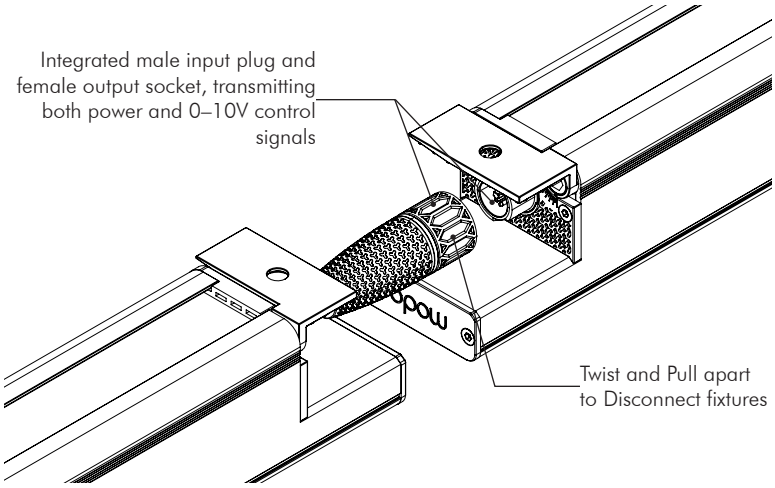

23 Fixture to Fixture Disconnect

Desconexión de accesorio a accesorio

Déconnexion d'un appareil à l'autre

Twist the connector slightly and carefully separate the cables.
Gire ligeramente el conector y separe con cuidado los cables.
Tournez légèrement le connecteur et séparez soigneusement les câbles.

WARNING!
Ensure system is fully de-energized before connecting or disconnecting. "Hot plug" connections can result in a power surge which can destroy the entire run of fixtures.

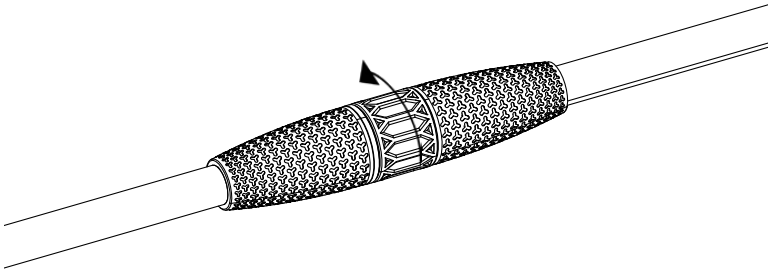

Due to continuous improvements and innovations, specifications may change without notice. Please refer to our website for current technical data. These figures are provided as a guideline only and may vary with differing power supplies and installations. All rights reserved. E&OE.

3280 W Sunset Rd Las Vegas, NV 89118 | T: 702 407 7775
F: 702 407 7773 | www.modalight.com | © 2026

24 Curved Layouts

Diseños curvos

Dispositions courbes

Each fixture has a short power/signal input cable that can extend to simplify connection or disconnection, while also allowing limited angular adjustment of up to 90° between adjacent units.

Avoid placing strain on the cable when making connections. For larger gaps or wider angles, use the optional jumper cables.

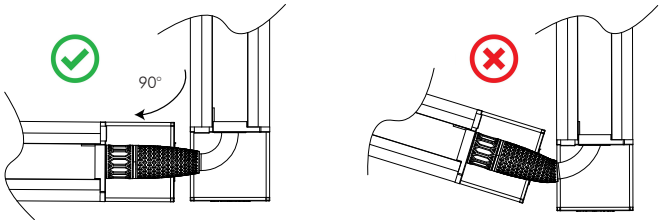

25 Final Fixture Termination

Terminación del último partido

Fin du match final

At the final fixture in the run, always install the terminator cap on the output connector to ensure the live contacts are safely protected.

Step 1: Align the male and female connector.
Paso 1: Alinear el connector macho con hembra.
Étape 1: Alignez le connecteur mâle et femelle.

Step 2:Push connection together (listen for the "click" that confirms a full connection)
Paso 1: Empuje la conexión para unirla (escuche el "clic" que confirma una conexión completa)
Étape 1:Appuyez sur la connexion ensemble (écoutez le « clic » qui confirme une connexion complète)

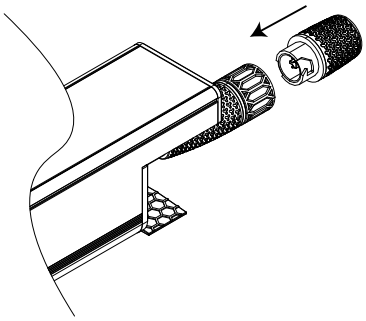

26 Connection types

Tipos de connexiones

Types de connexion

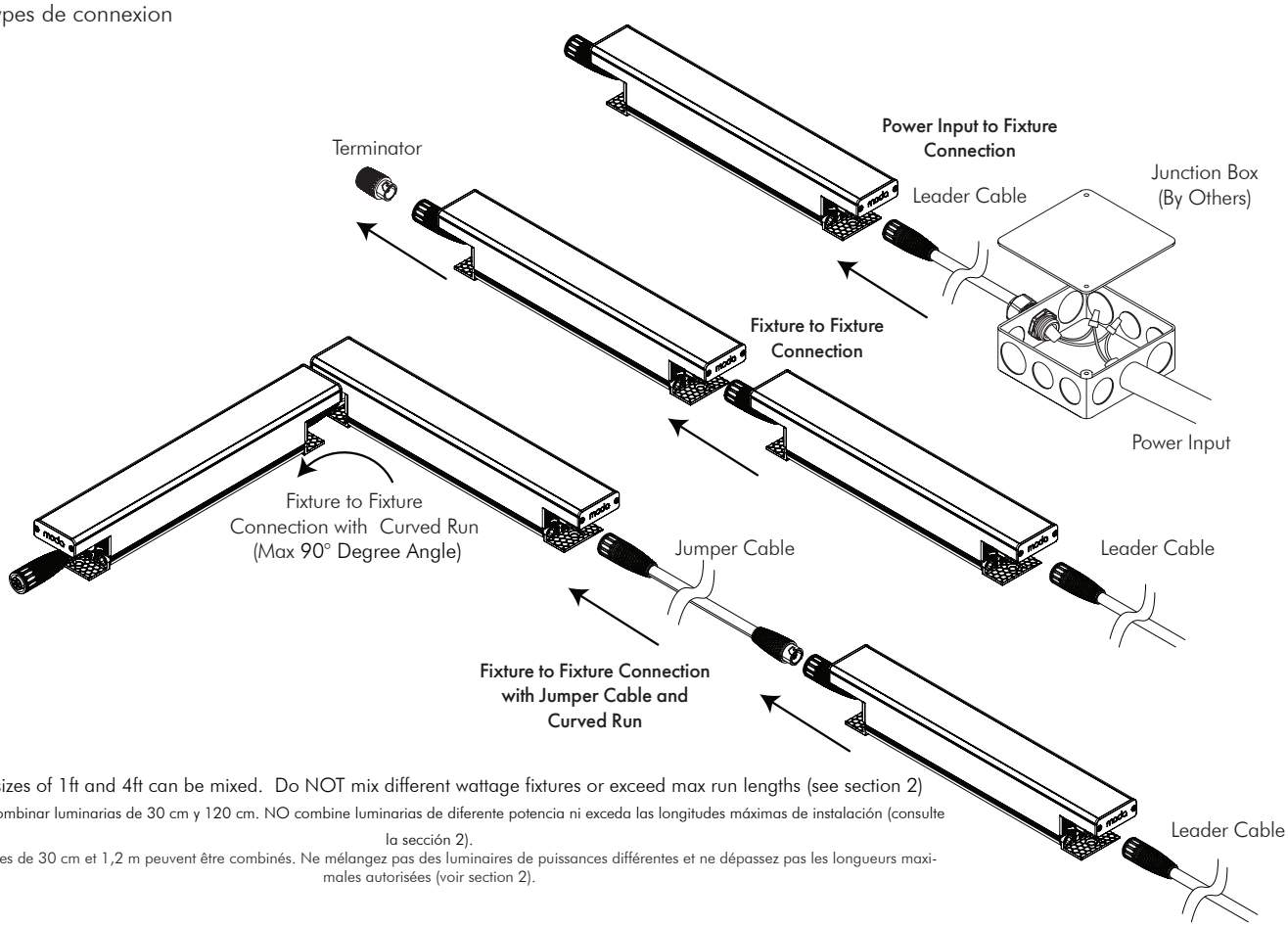

Fixture sizes of 1ft and 4ft can be mixed. Do NOT mix different wattage fixtures or exceed max run lengths (see section 2)

Se pueden combinar luminarias de 30 cm y 120 cm. NO combine luminarias de diferente potencia ni exceda las longitudes máximas de instalación (consulte la sección 2).

Les luminaires de 30 cm et 1,2 m peuvent être combinés. Ne mélangez pas des luminaires de puissances différentes et ne dépassez pas les longueurs maximales autorisées (voir section 2).

Due to continuous improvements and innovations, specifications may change without notice. Please refer to our website for current technical data. These figures are provided as a guideline only and may vary with differing power supplies and installations. All rights reserved. E&OE.

3280 W Sunset Rd Las Vegas, NV 89118 | T: 702 407 7775
F: 702 407 7773 | www.modalight.com | © 2026

27 Attach Optional Louver

Adjuntar rejilla opcional

Fixer une persienne en option

Step 1: Attach optional louver to the top of the fixture until it clicks into place. Use four of these louvers for four foot fixtures.
Paso 1: Coloque la rejilla opcional en la parte superior de la luminaria hasta que encaje. Use cuatro rejillas para luminarias de cuatro pies.
Étape 1 : Fixez la grille optionnelle sur le dessus du luminaire jusqu'à ce qu'elle s'enclenche. Utilisez quatre de ces grilles pour les luminaires de 1,20 m.

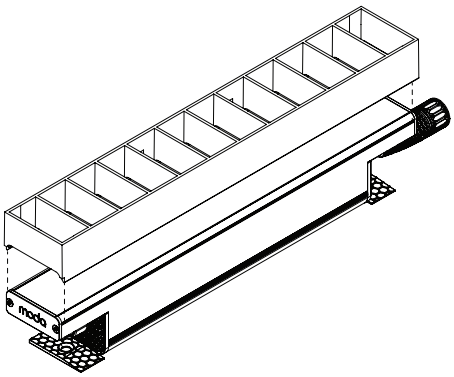

28 Detach Optional Louver

Desmontar la rejilla opcional

Détacher la persienne en option

Step 1: Working along one side of the louver, use a small flat-blade screwdriver to carefully release the louver from the fixture. Apply slight outward pressure on the louver side as you progress to prevent it from snapping back into place.
Paso 1: Trabajando a lo largo de un lado de la persiana, use un destornillador pequeño de punta plana para soltarla con cuidado del soporte. Aplique una ligera presión hacia afuera en el lado de la persiana a medida que avanza para evitar que vuelva a su lugar.
Étape 1 : En travaillant le long d'un côté de la grille, utilisez un petit tournevis plat pour la détacher délicatement du luminaire. Exercez une légère pression vers l'extérieur sur le côté de la grille au fur et à mesure de la progression pour éviter qu'elle ne se remette en place.

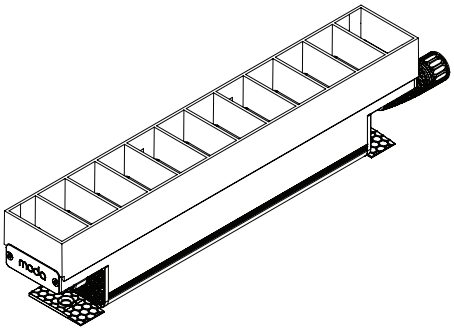

29 Attach Optional Louver with 4ft Fixtures

Conecte la rejilla opcional con accesorios 4ft

Fixez le volet en option avec les luminaires 4ft

Louvers are supplied in 1ft (304 mm) sections. A total of four sections are needed to fully cover a 4ft fixture.
Las rejillas se suministran en secciones de 304 mm (1 pie). Se necesitan cuatro secciones para cubrir completamente una luminaria de 1,22 m (4 pies).
Les persiennes sont fournies en sections de 304 mm (1 pi). Quatre sections sont nécessaires pour couvrir entièrement un luminaire de 1,2 m (4 pi).

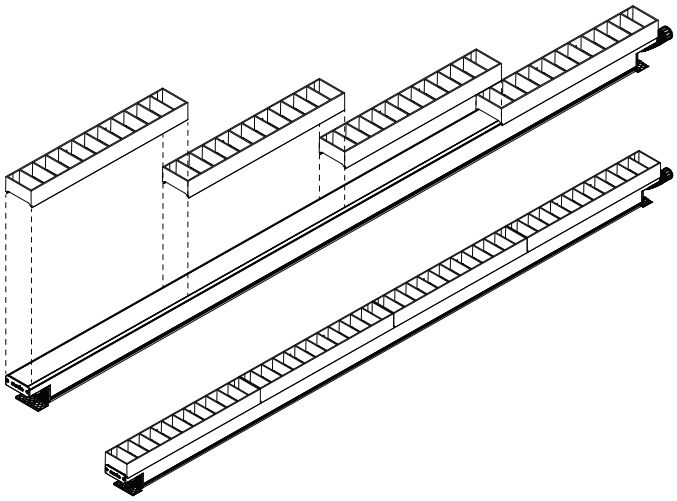

30 Optional Louvers

Rejillas opcionales

Persiennes en option

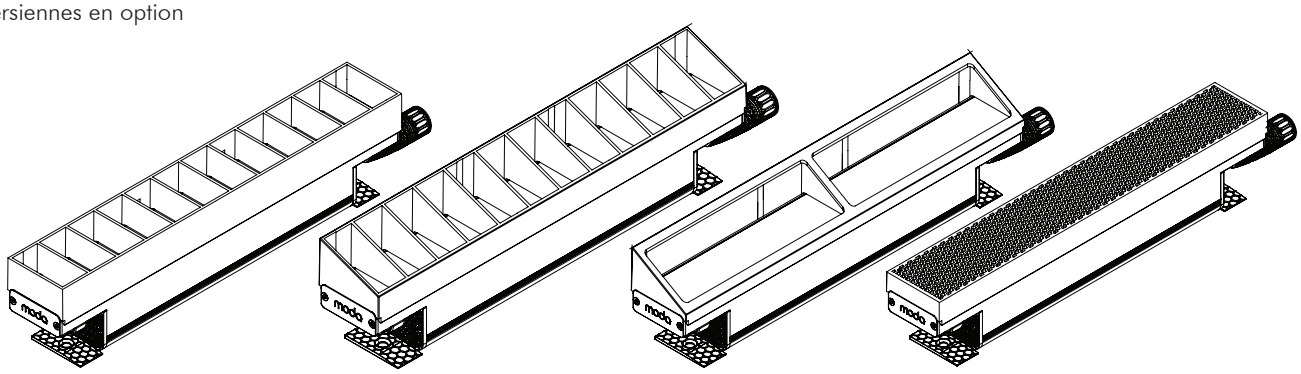

Symmetric Louver
MSL-I-1ft-*

Asymmetric Louver
MAL-I-1ft-*

Visor Louver
MVL-I-1ft-B

Honeycomb Louver
MHL-I-1ft-B

* - Louver available in Black or White

Due to continuous improvements and innovations, specifications may change without notice. Please refer to our website for current technical data. These figures are provided as a guideline only and may vary with differing power supplies and installations. All rights reserved. E&OE.

3280 W Sunset Rd Las Vegas, NV 89118 | T: 702 407 7775
F: 702 407 7773 | www.modalight.com | © 2026

31 Dimensions – 1ft Fixture

Dimensiones – Accesorio de 1 pie

Dimensions – Luminaire de 1 pi

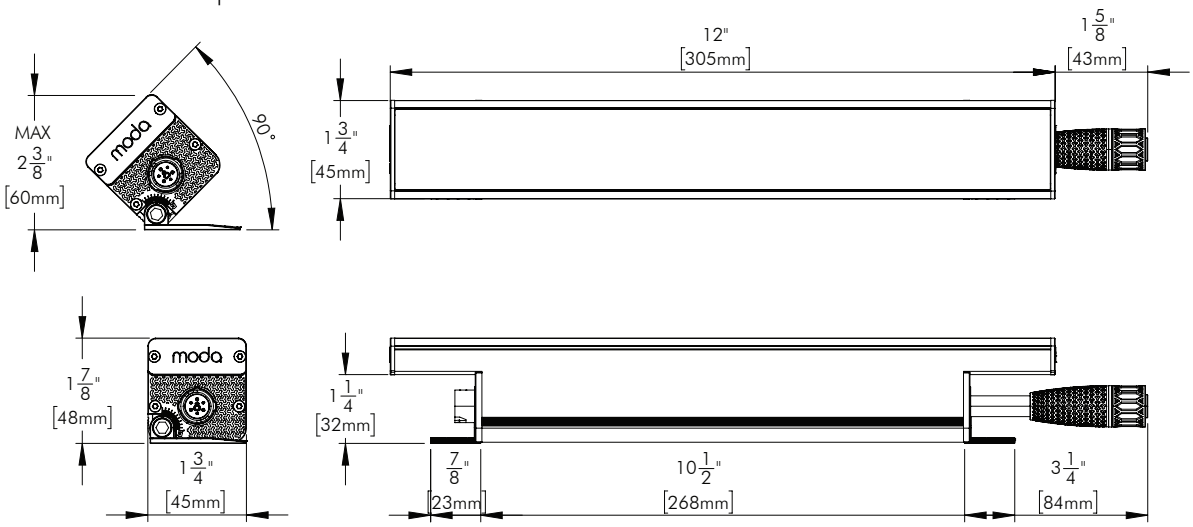

32 Dimensions – 4ft Fixture

Dimensiones – Luminaria de 4 pies

Dimensions – Luminaire de 4 pieds

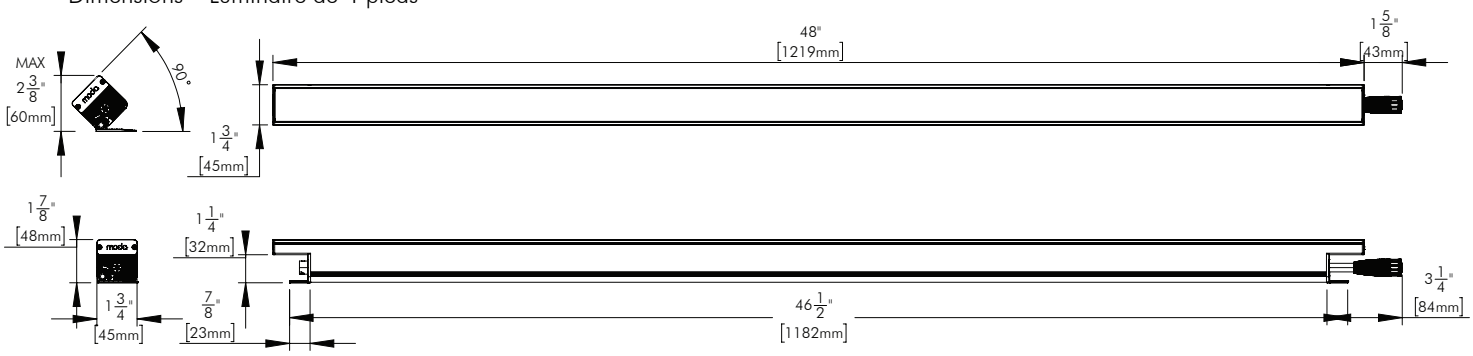

33 Dimensions – With Optional Louvers

Dimensiones – Luminaria de 4 pies

Dimensions – Luminaire de 4 pieds

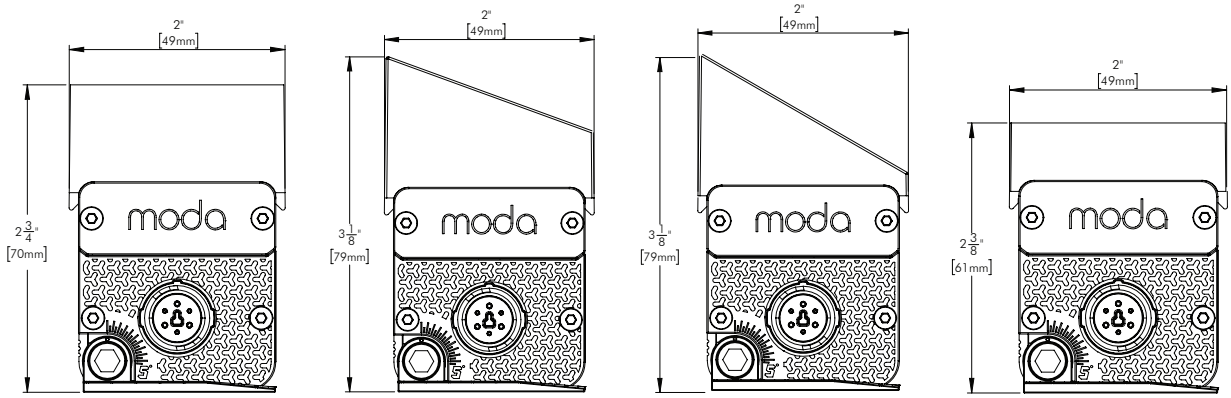

Symmetric Louver 1ft
MSL-I-1ft-*

Asymmetric Louver 1ft
MAL-I-1ft-*

Visor Louver 1ft
MVL-I-1ft-B

Honeycomb Louver 1ft
MHL-I-1ft-B

* - Louver available in Black or White

Due to continuous improvements and innovations, specifications may change without notice. Please refer to our website for current technical data. These figures are provided as a guideline only and may vary with differing power supplies and installations. All rights reserved. E&OE.

3280 W Sunset Rd Las Vegas, NV 89118 | T: 702 407 7775
F: 702 407 7773 | www.modalight.com | © 2026

34 Ground and Pendant Mounting Arm Dimensions

Ordering SKU: MPGMA-I-XXFT-SV

Dimensiones del brazo de montaje en tierra

Dimensions du bras de fixation au sol

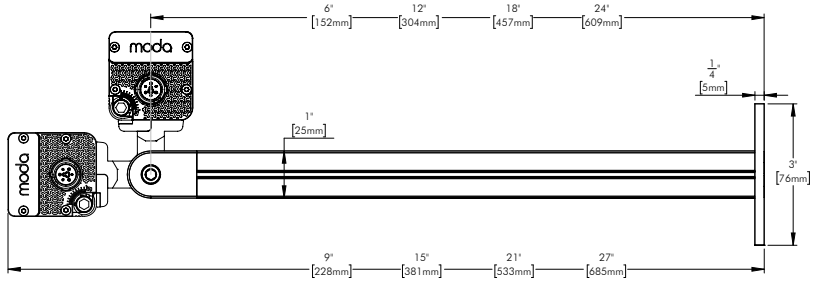

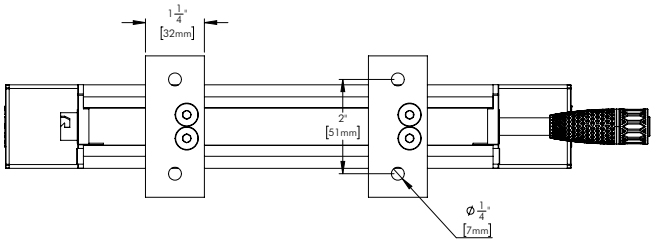

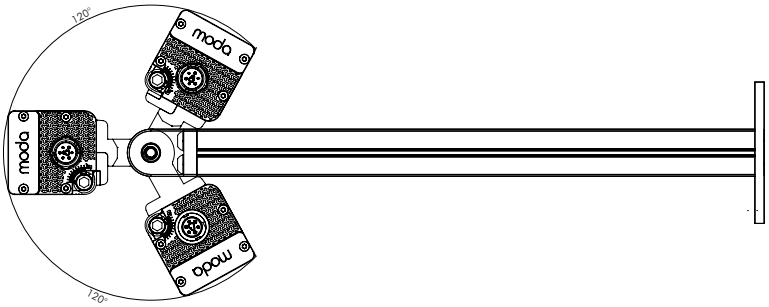

35 Wall Mounting Arm Dimensions

Ordering SKU: MWMA-I-XXFT-SV

Dimensiones del brazo de montaje en pared

Dimensions du bras de fixation murale

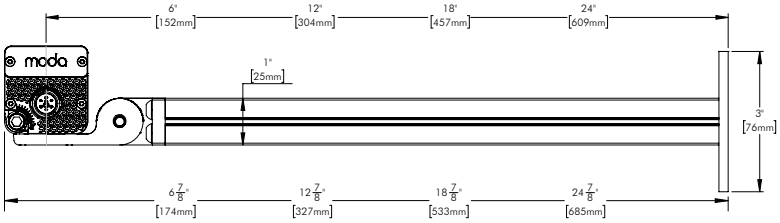

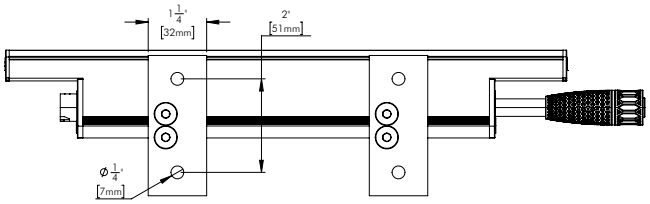

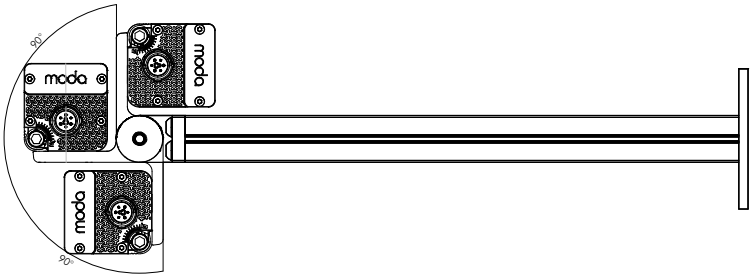

Due to continuous improvements and innovations, specifications may change without notice. Please refer to our website for current technical data. These figures are provided as a guideline only and may vary with differing power supplies and installations. All rights reserved. E&OE.

3280 W Sunset Rd Las Vegas, NV 89118 | T: 702 407 7775
F: 702 407 7773 | www.modalight.com | © 2026

SPECIFICATIONS

PHYSICAL

Dimensions	L: 12 in (304mm) L: 48in (1219mm)	W: 1 3/4in (45mm) H: 1 7/8in (48mm)
Weight	12in: 0.8lbs (0.3kg) 48in: 2.8lbs (1.3kg)	
Construction	6063 Aluminum Body, Die-cast Zinc Integral Fixings, Nylon End Caps and Polycarbonate Optical Lens	
Finish	Anodized Silver body with black caps & fixing brackets	
Ingress Protection	Dry / Damp Location - IP54	
Impact Rating	IK07	
Adjustment	Integral locking, fluid adjustment up to 90°	
Vibration	3G - ANSI C136.31	
Storage Temperature	-13°F to 122°F (-25°C - 50°C)	
Start-up Temperature	-4°F to 122°F (-20°C - 50°C)	
Operating Temperature	-4°F to 122°F (-20°C - 50°C)	

ELECTRICAL

Input Voltage	100-277V AC 50Hz/60Hz
Power Factor	0.99 @ 120V 0.92 @ 277V
Control	0-10V down to 1%

OUTPUT LED DATA

SDCM	2-Step MacAdam Ellipse
Color Bin Tolerance	Zero Bin
CRI	>95
CQS	>96
Lumen Maintenance	60,000 Hours L70 @ 25°C 50,000 Hours L70 @ 50°C
Testing Data	Light Data LM-79-08 & LM-80-08

STANDARDS & CERTIFICATIONS

Certification	Tested to UL & CSA by Intertek For Use in USA & CANADA. CE & RoHS Compliant.
Class	1
Warranty	5 Year Limited Warranty

MODA GRAZE INTERIOR

CCT	2200K, 2400K, 2700K, 3000K, 3500K, 4000K
Beam Angle	10°x10°; 10°x15°; 10°x20°; 10°x30°; 15°x15°; 15°x20°; 15°x25°; 15°x30°; 17°x17°; 17°x35°; 17°x65°; 20°x20°; 20°x25°; 20°x30°; 20°x60°; 20°x70°; 22°x30°
Applications	Architectural and Textured Walls, Interior Building Facades, Interior Accent Walls, Columns and Vertical Elements, Hospitality, Retail, and Public Spaces

MODA WASH INTERIOR

CCT	2200K, 2400K, 2700K, 3000K, 3500K, 4000K
Beam Angle	25°x25°; 25°x33°; 25°x45°; 25°x60°; 25°x70°; 30°x25°; 30°x30°; 30°x35°; 30°x40°; 30°x60°; 35°x20°; 35°x25°; 35°x35°; 35°x65°; 40°x30°; 40°x40°: 40°x60°; 40°x65°; 45°x35°; 45°x55°; 45°x60°; 60°x25°; 60°x60°; 60°x70°; 65°x20°; 70°x25°; 70°x40°; 70°x70°; 100°x100°
Applications	Wall, ceiling, floor washing, cove and indirect illumination

MODA COVE INTERIOR

CCT	2200K, 2400K, 2700K, 3000K, 3500K, 4000K
Beam Angle	120°x120°
Applications	Coves, Indirect Ceiling lighting, Floating ceilings, Soffits, Ambient architectural lighting, Retail and Commercial lighting, Soft Decorative and accents.

MODA NARROW ASYMMETRIC INTERIOR

CCT	2200K, 2400K, 2700K, 3000K, 3500K, 4000K
Beam Angle	15°x40°x10°; 20°x55°x10°
Applications	Architectural and textured walls, Interior building facades, Interior accent walls, Columns and vertical elements, Hospitality, retail, and public spaces

MODA ASYMMETRIC WASH INTERIOR

CCT	2200K, 2400K, 2700K, 3000K, 3500K, 4000K
Beam Angle	25°x40°x5°, 30°x60°x10°, 25°x50°x5°
Applications	Wall, ceiling, floor washing, cove and indirect illumination

MODA WIDE ASYMMETRIC INTERIOR

CCT	2200K, 2400K, 2700K, 3000K, 3500K, 4000K
Beam Angle	Wide Asymmetric
Applications	Cove, Ceiling and Wall Washing, Floor/ Path lighting, indirect general lighting, retail displays & architectural lighting.

Due to continuous improvements and innovations, specifications may change without notice. Please refer to our website for current technical data. These figures are provided as a guideline only and may vary with differing power supplies and installations. All rights reserved. E&OE.

3280 W Sunset Rd Las Vegas, NV 89118 | T: 702 407 7775
F: 702 407 7773 | www.modalight.com | © 2026

⚠ De-energize system before connecting or disconnecting product
Desactive el sistema antes de conectar o desconectar el producto.
Système hors tension avant de connecter ou de déconnecter le produit

⚠ Do not attempt to install or use the product until installation is fully read and understood.
¡No intente instalar o utilizar el producto sin antes leer y comprender las instrucciones.
Ne tentez pas d'installer ou d'utiliser le produit jusqu'à ce que l'installation est entièrement lu et compris.

⚠ Do not use the product if lens or power cables are damaged.
¡No utilize el producto si el lente o cables de energía están defectuosos.
Ne pas utiliser le produit si l'objectif ou les câbles d'alimentation sont endommagés.

⚠ Do not use any current or voltages that do not match the product's listed operating voltage / current.
No utilice ninguna corriente o voltaje que no coincida con el voltaje/ corriente de funcionamiento indicados para el producto.
N'utilisez pas de courant ou de tension qui ne correspondent pas à la tension/au courant de fonctionnement indiqué pour le produit.

⚠ Not compatible with voltage step down devices/voltage converters/buck converter.
No es compatible con dispositivos de reducción de voltaje / convertidores de voltaje / convertidor de buck.
Non compatible avec les dispositifs abaisseurs de tension / convertisseurs de tension / convertisseur abaisseur.

⚠ Must be wired on its own dedicated lighting circuit. Do not share the same lighting circuit with motors, fans or computers as this may cause flickering of the fixture.
Debe conectarse en su propio circuito de iluminación dedicada. No comparta en el mismo circuito de iluminación con motores, ventiladores o computadoras ya que puede causar parpadeo en el equipo.
Doit être câblé sur son propre circuit d'éclairage dédié. Ne partagent pas le même circuit d'éclairage avec moteurs, des ventilateurs ou des ordinateurs, car cela risquerait de scintillement de l'appareil.

⚠ Only use compatible 0-10V Controllers.
Utilice únicamente controladores compatibles de 0 a 10 V.
Utilisez uniquement des contrôleurs 0-10 V compatibles.

⚠ Never put power and data in the same conduit or raceway.
¡Nunca se pudo alimentar ni datos en los mismos cables o conductos.
Ne mettez jamais la puissance et les données dans le même conduit ou caniveau.

⚠ There are six (6) distinct outputs. Do not mix outputs, only connect matching output types.
Hay seis (6) salidas distintas. No mezcle salidas; conecte únicamente las que coincidan.
Il existe six (6) sorties distinctes. Ne mélangez pas les sorties, connectez uniquement les types de sorties correspondants.

⚠ If a fixture is not working, please remove from service. Contact Moda Support.
Si un accesorio no funciona, retírelo del servicio. Contacte con el servicio de asistencia de Moda.
Si un luminaire ne fonctionne pas, veuillez le retirer du service. Contactez l'assistance Moda.

⚠ Do not coat the product in paint. This will ruin the product and void warranty.
No cubra el producto en pintura. Esto va a arruinar el producto y anular la garantía.
Ne pas enduire le produit dans la peinture. Cela va ruiner le produit et annuler la garantie.

⚠ Please make sure to install in accordance with the local code.
Por favor asegúrese de instalar de acuerdo con el código local.
Faire S'il vous plaît veillez à installer en conformité avec le code local.

⚠ No serviceable parts - Do not disassemble.
No hay piezas reparables - No desamblar.
Aucune pièce - Ne pas démonter.

⚠ Do not hot swap fixtures.
No remplaze el producto mientras estén calientes.
Feds ne cherchez pas produit tout chaud.

⚠ Do not open fixtures as they are line voltage and could cause a shock.
No intente abrir el producto ya que contienen lineas de voltaje y podría causar un corto circuito.
Ne pas essayer d'ouvrir le produit car ils contiennent des lignes de tension pordría et provoquer un court-circuit.

⚠ Must use terminator.
Se tiene que utilizar terminadores.
Doit utiliser terminateur.

⚠ Do not stare into beam.
No mire fijamente la luz.
Ne pas regarder le faisceau.

⚠ Do not connect line voltage to data.
No conecte el voltaje de línea a los datos.
Ne pas connecter la tension de ligne aux données.

Due to continuous improvements and innovations, specifications may change without notice. Please refer to our website for current technical data. These figures are provided as a guideline only and may vary with differing power supplies and installations. All rights reserved. E&OE.

3280 W Sunset Rd Las Vegas, NV 89118 | T: 702 407 7775
F: 702 407 7773 | www.modalight.com | © 2026